KLUDI assembling set for 4-hole mixers

Ref.:
7878205-00

Finishes:
05 chrome

Product description
Manufacturer KLUDI GmbH & Co. KG
Typ: KLUDI assembling set for 4-hole mixers
Ref.: 7878205-00

assembling set for 4- hole mixers
to be covered by tiles or with visible installation aid
without visible installation aid 16021..
2x flexible pressure hoses G 1/2 x 1/2 x 400 mm
with angle valves G 1/2 x G 1/2
with 2 wall implementations G 1/2
with 2 foots
with 2 wall bearings
leak water container with backwater safeguarding
with connecting hose 2000 mm with hose clamps
leak water connecting
without srew set 76156..-00

pop-up and overflow set G 1 1/2"
with fixed siphon trap
2 swivel-joints
with flexible overflow tube
approved to DIN EN 274
with connecting branch DN40/50
with trim set
for course hole Ø 52 mm

Product picture

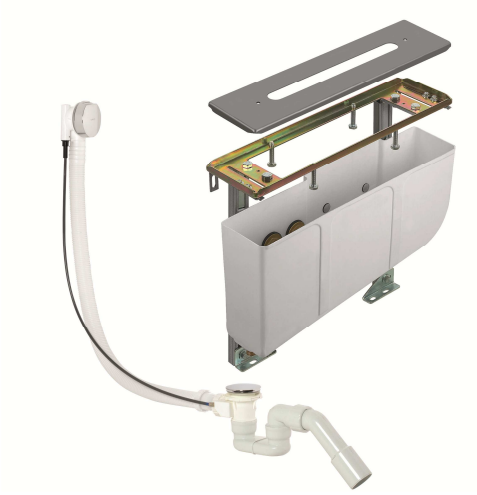
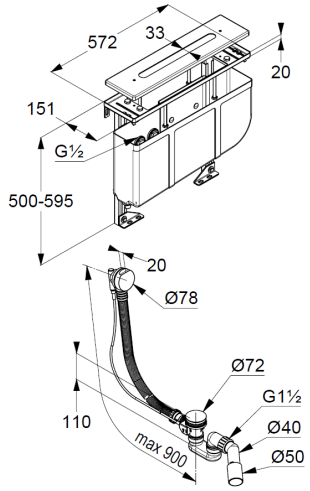
Dimensional drawing