Product: **KLUDI AMBA single lever basin mixer DN 15**

Ref.: **530280575**

Product description

single lever basin mixer DN 15
single hole mounted
solid lever
ceramic cartridge
aerator M 24 x 1
flow rate 5 l/min at 3 bar
flexible high pressure supply tubes G 3/8 inch
rapid installation set

Finishes:
05 chrome

Product picture

Advertisement

single lever basin mixer, manufacturer KLUDI GmbH & Co. KG
KLUDI AMBA item no. 530280575
type: single lever basin mixer, DN 15 / PN 10, chrome plated brass, solid lever chrome plated metal, ceramic cartridge K-28, aerator M 24 x 1, flow rate 5 l/min at 3 bar, flexible high pressure supply tubes 3/8 inch with DVGW / W270 approval, rapid installation set
dimensions: height: 140 mm, nozzle height: 75 mm, projection: 130 mm

Dimensional drawing

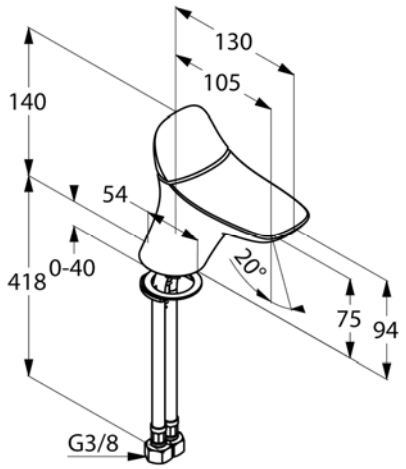
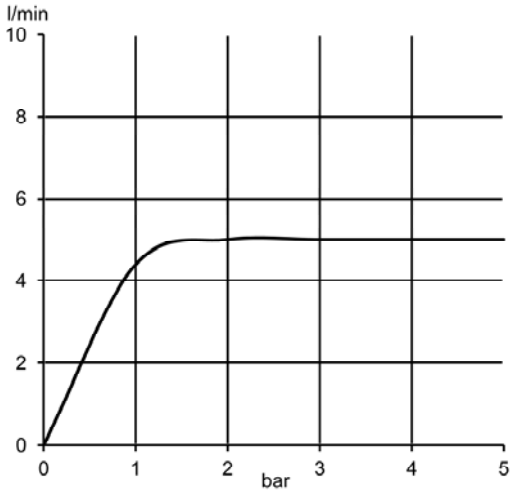
Flow rate diagram