KLUDI-RESA D CERAMIC CISTERN GLOSSY WHITE

24WCT43

undefined



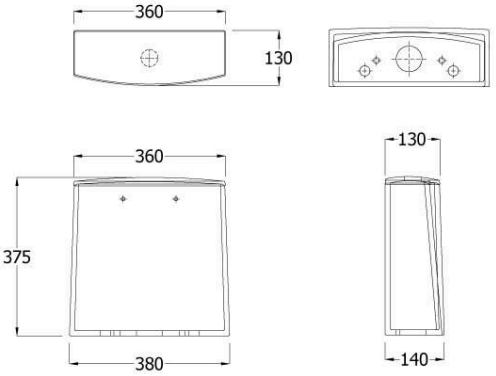

Technical Specification

Series:	undefined
Color:	glossy white
Dimensions:	13 x 37.5 x36cm

Name:

- KLUDI-RESA D
- Bottom Inlet
- Dimensions- 375x360 mm

Dimensions: All dimensions in mm. Tolerance of vitreous china & fireclay items: Â± 5% for below 200mm and Â± 3% for above 200mm; for all other items tolerance Â± 1%. Note: Due to a continuing development program to improve design and performance, the manufacturer reserves all rights to vary specifications without prior information. Please note accessories are for photographic use only.